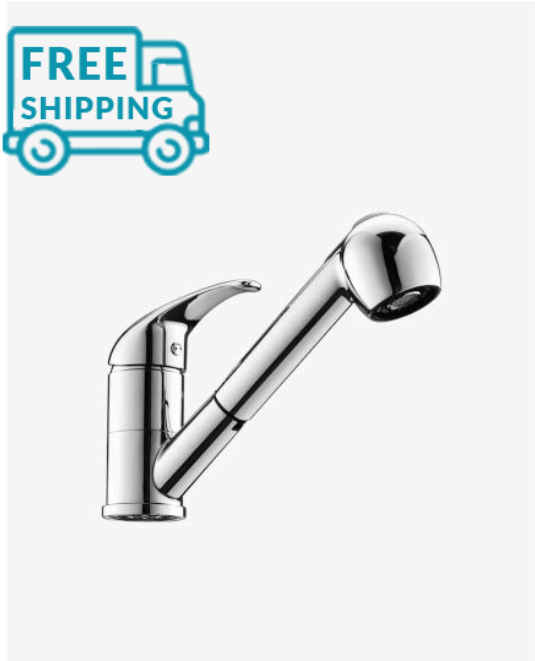

Simple Pull Out Kitchen Laundry Mixer Tap

SKU#: F-2024

$139.00

Total Height: 174mm
Spout Height: 117mm
Spout Length/Reach: 190mm
Construction: Brass
Finish: Chrome Finish
Cartridge: 40mm Ceramic
Accreditation: AU Standard, WELS 7L/Min 4 Star and Watermark
WELS Registration: T17098
Warranty: 5 Year Product Warranty

This simple pull out mixer tap has minimalistic design with practical functionality. The pull out hose extension is a premium feature packed into this budget kitchen tap, giving you the ability to direct water where required for complete control. The swivel spout is a must in the kitchen and laundry, as it makes it possible to conveniently move the tap aside for full access to the sink. This tap is Ideal for larger or double sinks and makes clean up a breeze.

View our store to find a matching laundry trough, vanity unit, sink or mirror or shower fixture for your bathroom and save on combined delivery.

See listing image for measurement specification.

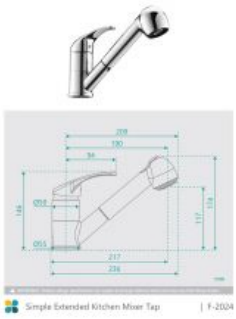

IMPORTANT: Detail shown are as listed on the date of print & may change without notice. Detail may contain technical inaccuracies or typographical errors.

IMPORTANT: Detail shown are as listed on the date of print & may change without notice. Detail may contain technical inaccuracies or typographical errors.

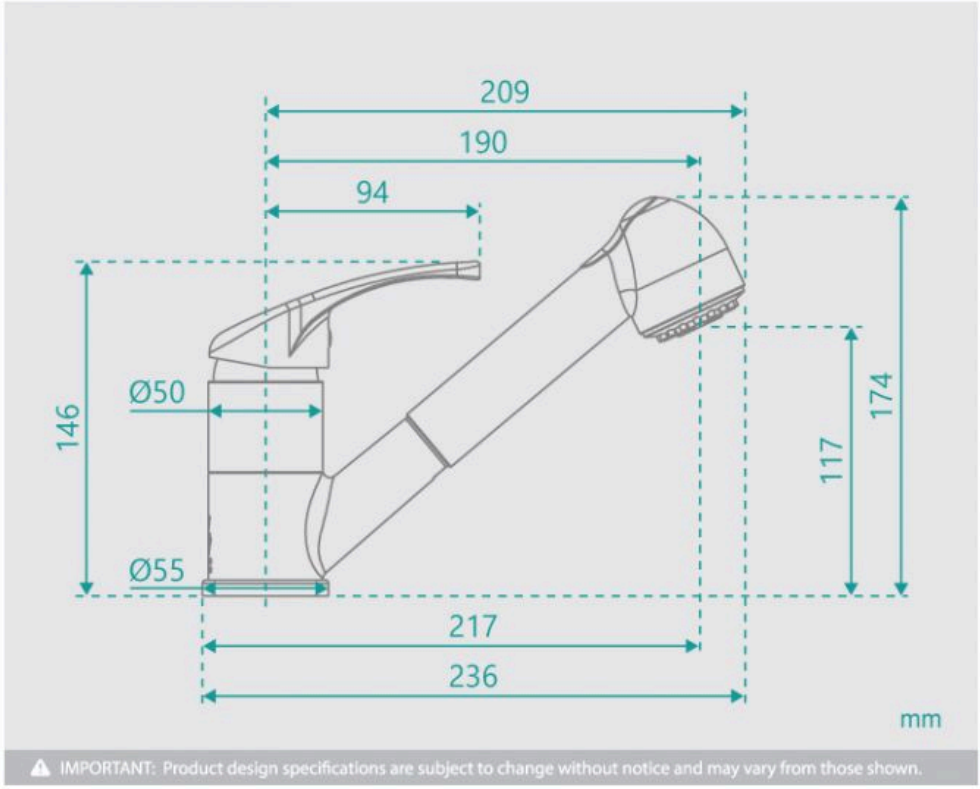

Simple Extended Kitchen Mixer Tap | F-2024

IMPORTANT: Detail shown are as listed on the date of print & may change without notice. Detail may contain technical inaccuracies or typographical errors.