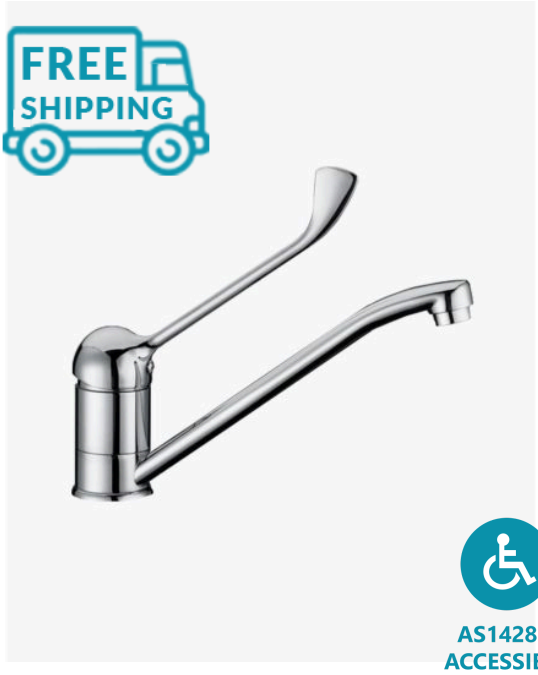

Ambulant Kitchen Laundry Mixer Tap

SKU#: F-2027

$149.00

Total Height: 225.01mm
Spout Height: 154mm
Spout Length/Reach: 274mm
Construction: Brass
Finish: Chrome Finish
Cartridge: 40mm Ceramic
Accreditation: AU standard, WELS 6.5L/Min 4 Star and Watermark
WELS Registration: T16816
Warranty: 5 Year Product Warranty

The Ambulant kitchen mixer tap is simple yet unique and is ideal for kitchen and laundry spaces. Its elongated handle has been designed for your convenience.

Available in a classic chrome finish, with a large lever handle designed for users with limited dexterity or strength.

The large lever feature can also assist by being easier to reach from a seated position or standing with limited mobility.

The ambulant kitchen mixer swivel tap is made from brass for durability, creating a great product for high traffic use.

See listing image for measurement specification.

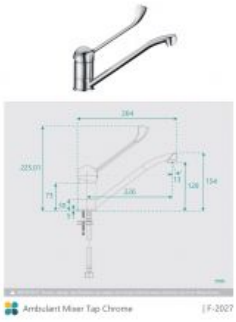

IMPORTANT: Detail shown are as listed on the date of print & may change without notice. Detail may contain technical inaccuracies or typographical errors.

IMPORTANT: Detail shown are as listed on the date of print & may change without notice. Detail may contain technical inaccuracies or typographical errors.

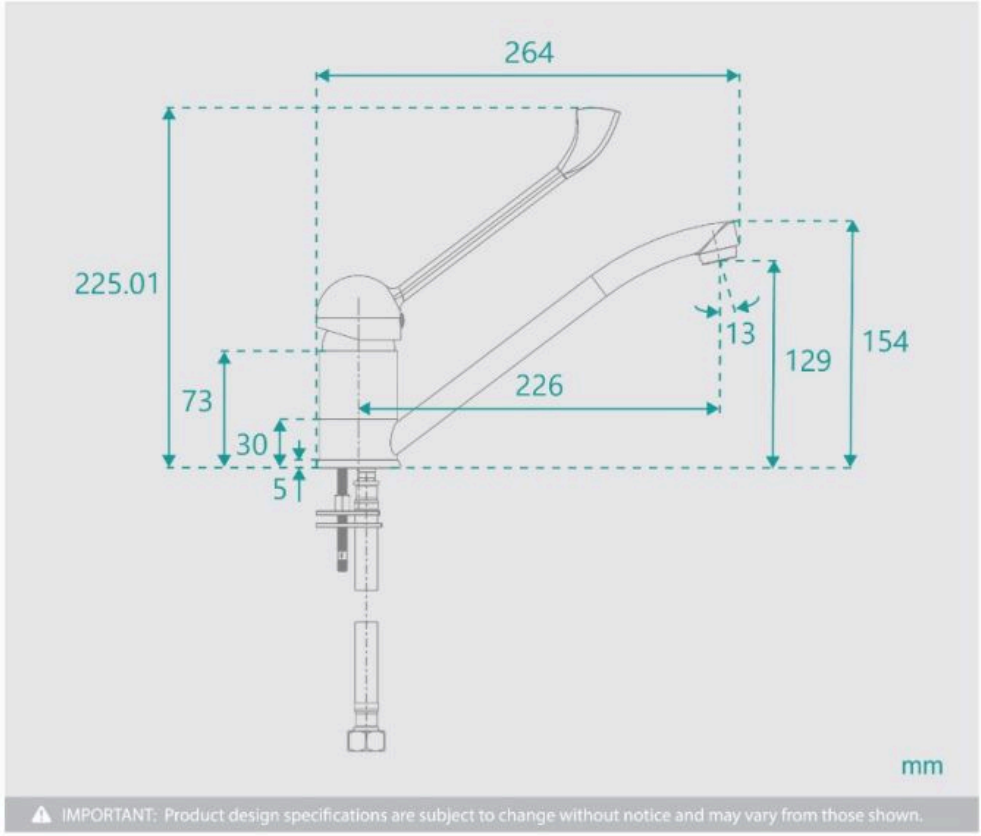

Ambulant Mixer Tap Chrome | F-2027