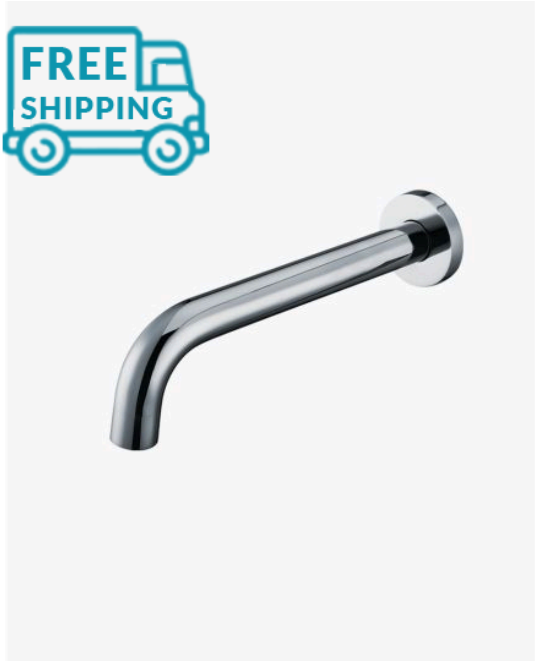

Rosa Basin / Bath Spout

SKU#: S-3111

$63.70

~~$91.00~~

FINISH OPTION

Backplate Diameter: 60mm
Spout Length/Reach: 200mm
Construction: Brass
Accreditation: AU Standard, WELS 7.5L/min 4 Star and Watermark
WELS Registration: T30142
Warranty: 5 Year Product Warranty

The Rosa Basin/Bath Spout is the ultimate product to elevate your bathroom design. Used either for your basin or bath, this delightfully modern and sleek spout brings practicality and style to your bathroom. In a variety of colours from chrome, brushed nickel, brushed gold, matte black and gunmetal grey. With such a wide variety of finishes, you are sure to find the perfect colour match for your bathroom. The product comes with an aerator to allow the installer to configure the spout for basin or bath setup.

View our store to find the perfect basin or bath to match and save on combined delivery!

Image Coming Soon

IMPORTANT: Detail shown are as listed on the date of print & may change without notice. Detail may contain technical inaccuracies or typographical errors.

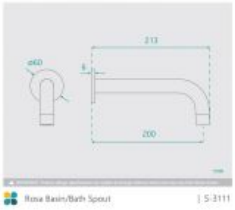

IMPORTANT: Detail shown are as listed on the date of print & may change without notice. Detail may contain technical inaccuracies or typographical errors.

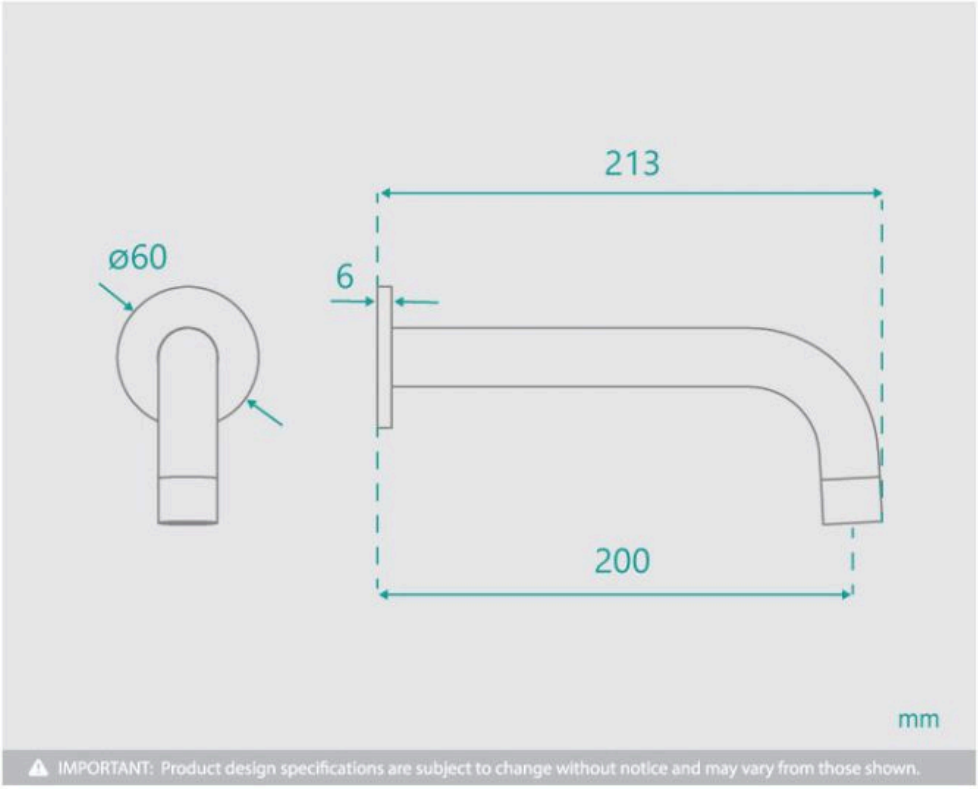

Rosa Basin/Bath Spout | S-3111