# Harper Back to Wall Bath 1400 White

SKU#: B-4038

**From $929.00**

WASTE OPTION

BATH CADDY OPTION

Length: 1400mm
Width: 700mm
Height: 580mm
Installation: Back to Wall
Configuration: Self-supporting base and frame with adjustable legs
Construction: Sanitary grade acrylic with solid fiberglass reinforcement
Key Features: High quality sanitary acrylic, double wall insulated for heat retention, easy installation, reinforced for durability
Finish: White High Gloss
Overflow: No
Waste: Standard Plug & Waste included
Capacity: 220L
Warranty: 7 Year Product Warranty

The Harper Back to Wall bath is perfectly designed to be installed flush against a wall; with no gaps, this bath is easier to clean with less exposed areas for dust to collect than a freestanding bath. A traditional look with a modern twist. Its stunning white gloss finish adds simplicity to any bathroom, the smooth lines of the Harper are inviting and stylish. The contemporary design will instantly freshen up your bathroom space.

Suits:
Retreat Bath Caddy Solid Ash Natural (A-8101)
Retreat Bath Caddy Solid Ash Walnut (A-8302)
Dekoda Bath Caddy Solid Ash Natural (A-8104)
Dekoda Bath Caddy Solid Ash Walnut (A-8300)

View our store to find a matching vanity unit, basin, mirror, basin or shower fixture for your bathroom.

*IMPORTANT: Detail shown are as listed on the date of print & may change without notice. Detail may contain technical inaccuracies or typographical errors.*

*IMPORTANT: Detail shown are as listed on the date of print & may change without notice. Detail may contain technical inaccuracies or typographical errors.*

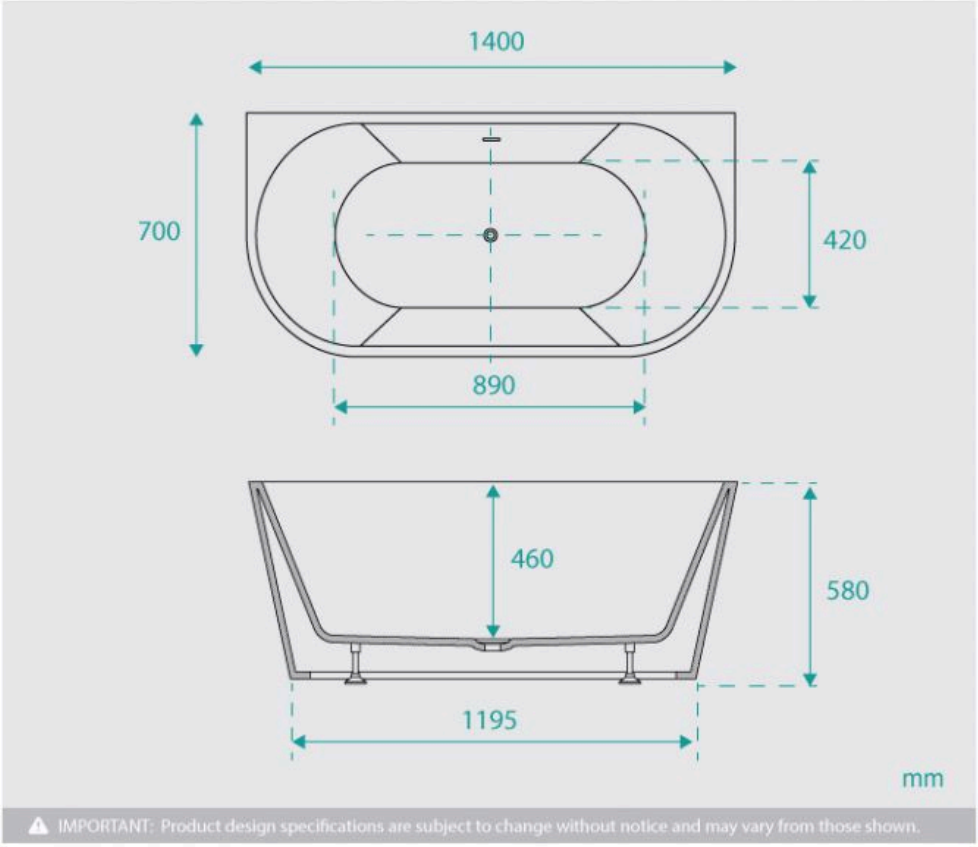


Harper Back to Wall 1400 Bath | B-4038