Rina Toilet Suite

SKU#: TP-1011 / TP-1012

From $199.00

TRAP

Length: 665mm
Width: 345mm
Height: 790mm
Seat & Lid: Superior Hardened & Soft Closing
Flush: R&T (bottom inlet), Dual flush button - 4.5 Lt per flush, 3 Lt per half flush
Accreditation: AU Standard, Watermark, WELS 4 Star rated
WELS Registration: L03694
Warranty: 2 Year Product Warranty*

The Rina Toilet Suite is a modern builders range toilet suite that is great value and comfortable to use. The design of the Rina is both rounded and wider than most which provides greater ease and access from standing up and sitting down.

P Trap - 180mm
S Trap - 150mm
See image specifications for further details

***Please ensure to purchase suitable trap configuration for your installation.*

**Please note that for ceramic products, specifications must allow +/- 10 mm tolerance for manufacturing variance, it is recommended to use measurements of the actual product received. Colours displayed online may appear different due to screen settings.*

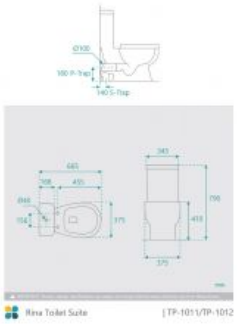

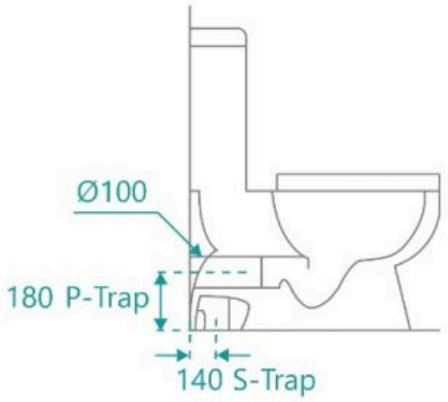

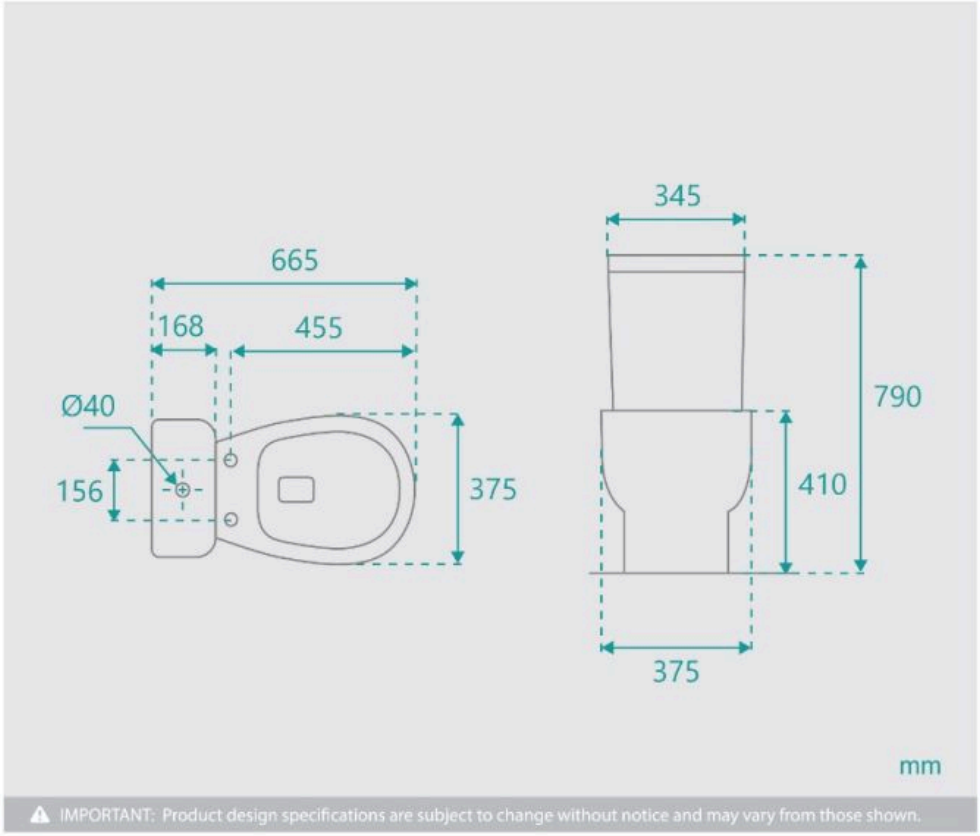

Rina Toilet Suite | TP-1011/TP-1012

IMPORTANT: Detail shown are as listed on the date of print & may change without notice. Detail may contain technical inaccuracies or typographical errors.